Installation Instructions for the PCH-12V Thermostat

1 General Description

The PCH-12V thermostat is a kit consisting of two parts:

- the **control unit** with an LCD display and buttons, used to set the desired operating mode, and
- the **actuator unit** with outputs for controlling valves and convectors, as well as inputs for a window switch, an external PT1000 thermometer, and a ModBus connection.

For correct operation, the control unit and the actuator unit must be connected in two ways: **by wire** (to power the control unit) and **wirelessly** (to exchange valve on/off commands and internal parameters).

2 Description of the Actuator Unit

The actuator unit is powered by a 230 VAC supply connected to terminals L and N. On the same side (the high-voltage section) are the terminals for connecting:

- the hot water valve (terminal H) and the cold water valve (terminal C),
- convector fan speeds 1, 2, and 3, which require 230 VAC for switching on/off.

> In the case of a two-pipe system, only the heating output (terminal H) is used for both heating and cooling.

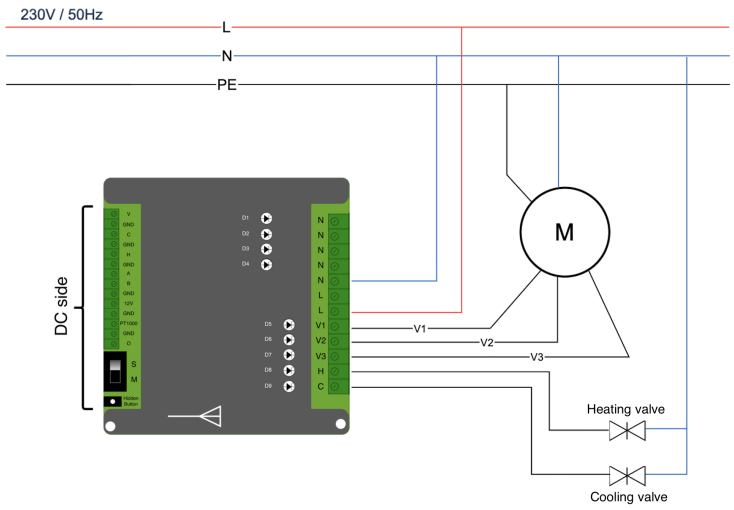

Figure 1: Actuator unit of the thermostat, connections on the 230VAC side.

On the other side of the actuator unit are the low-voltage outputs (smaller terminal blocks), which operate in the 0–10 V range:

- hot water valve (H, GND),
- cold water valve (C, GND),
- convectors (V, GND).

In addition, the low-voltage side also includes the following terminals:

- terminals for powering the control unit (12V, GND),
- connector for the ModBus RTU protocol (A, B),
- terminals for the window switch (O, GND),
- terminals for the external PT1000 thermistor (T, GND), which measures the water temperature in the case of a two-pipe system.

The actuator unit also includes:

- a **Master/Slave** selector switch (for correct operation it must be in the *Master* position, i.e. **moved away** from the center of the thermostat), and
- a **hidden button**, which is used later to establish the wireless connection between the control unit and the actuator unit.

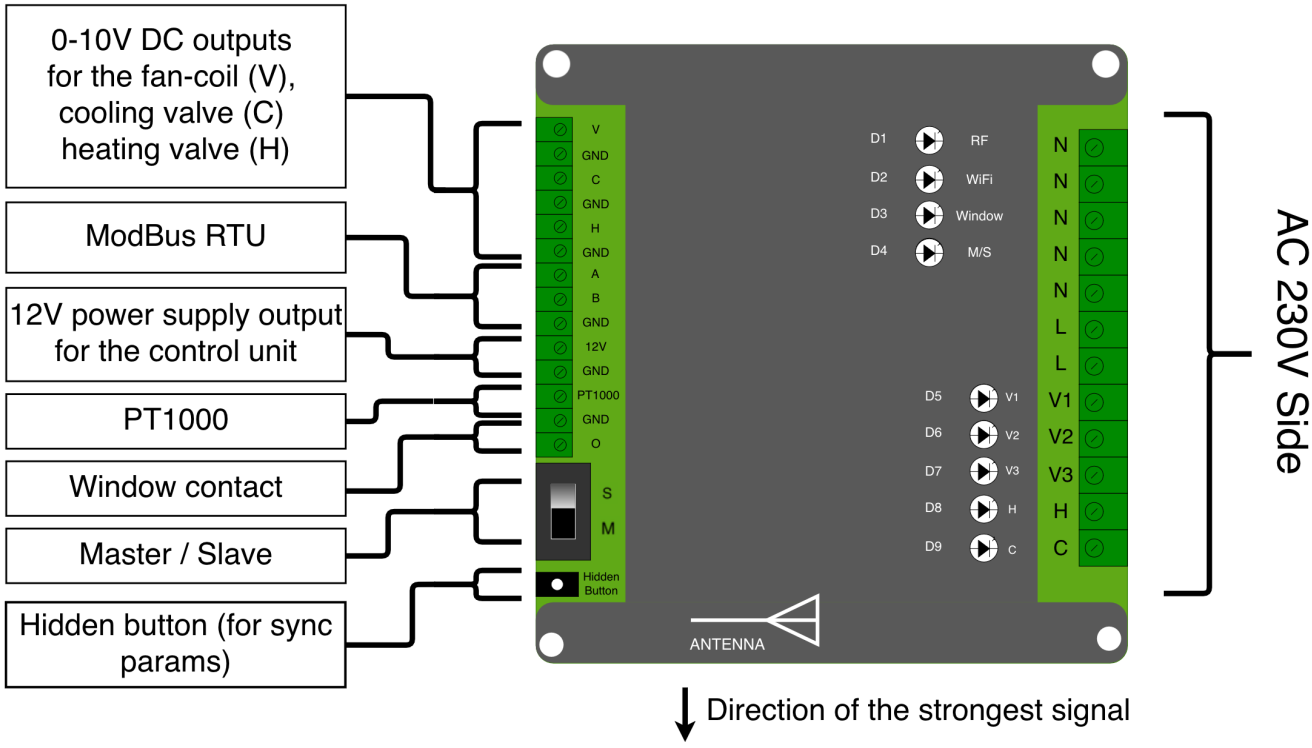

Figure 2: Actuator unit of the thermostat, connections on the 10VDC side.

3 Installing the Actuator Unit

Install the actuator unit no more than 30 m away from the control unit. Then connect the power supply, valves, convectors, PT1000 thermistor, ModBus, window switch, and the control unit power supply to the appropriate terminals (see Figure 2).

Important:

- The 230 VAC outputs must be connected on the side with the large terminal blocks, while the 0–10 V outputs must be connected on the side with the small terminal blocks.
- In the case of a two-pipe system, connect the output only to the hot water valve.
- The hot water valve and cold water valve outputs must never be short-circuited together.
- The sliding switch must be in the *Master* position (moved away from the center of the actuator unit).
- When powering the control unit, pay attention to correct polarity (terminals 12V, GND). It is also recommended to check with a multimeter that the + and - terminals are not accidentally short-circuited.

4 Installing the Control Unit

1. Remove the control unit from its packaging and detach the mounting plate from its back.
2. Fix the mounting plate to the wall (using the included M3 countersunk screws; alternatively, M3.5 screws may be used as long as they do not protrude beyond the plane of the mounting plate) at the location where the two-wire cable, connected on the other end to the actuator unit (terminals 12V and GND), is routed.
3. The mounting plate has four Phillips screws onto which the control unit is hooked. These screws can be slightly loosened if needed to make mounting easier.
4. Connect the two-wire cable to the included terminal blocks, then simply insert them into the back of the control unit.

When connecting, pay attention to polarity: on the control unit's terminal block, the outer pole (closer to the edge) is 12V, and the inner pole (closer to the center) is GND.

If everything is connected correctly, the control unit should power on when connected. Then hook it back onto the plate mounted on the wall, and remove the protective film from the keypad if needed.

5 Establishing the Wireless Connection

In addition to the wired connection for power, the control unit and the actuator unit must also be connected wirelessly. The procedure is as follows:

1. On the control unit, open the menu for changing parameters (see Section 6) and set parameter **P25 (RF address)** to an address different from 1 and different from the addresses of all other control units in the system.

2. For two-pipe systems, parameters **P36 = 1** (two-pipe system) and **P39 = 98** (if an external PT1000 thermistor is connected) can be set at the same time.

3. The same RF address must also be set on the actuator unit with which you want to establish the connection. To do this, first press and hold the hidden button on the actuator unit (on the far right side of the low-voltage section) until the LED next to the antenna starts blinking.

4. Immediately afterward, on the control unit, which must be in *OFF* mode, press and hold the "Down" key until the display shows "SYNC PARAMS".

If the procedure was successful, the control unit display will show "SYNC SUCCESS"; otherwise, it will show "SYNC ERROR". Upon successful synchronization, the actuator unit now also has the same P25 parameter, meaning it is ready to receive commands from the control unit. If the control unit and actuator unit have the same RF address (parameter P25), they will soon connect to each other, which will be indicated on the actuator unit by a green LED next to the antenna (D1 in Figure 2) and on the control unit by a lit antenna icon.

Each control unit in the system must have a unique RF address (parameter P25).

If two or more actuator units have the same RF address (parameter P25), the first actuator thermostat must be in **Master** mode (sliding switch moved away from the center), and all subsequent ones must be in **Slave** mode, in which case they will copy the outputs from the first actuator unit. If there is more than one actuator unit in **Master** mode with the **same RF address** (parameter P25) in the same system, they will report an error.

6 Changing Parameters from the Control Unit

1. Switch to *off* mode using the "ON/OFF" key.
2. Press and hold the "Up" key.
3. When the display shows "Pas", enter the password **31** and confirm with the "Fan" key.
4. Use the controls to navigate to the desired parameter you want to view or change.
5. To view the current value, press the "Snowflake/Sun" key.
6. Change the parameter value as needed and confirm with the "Fan" key.

To exit the parameter menu, press the "ON/OFF" key.