WIRELESS RF THERMOSTAT

PCH–RF–12V

For fan coil units in two-pipe and four-pipe air conditioning systems

Digital RF thermostat **PCH-RF-12V** automatically controls fan coil units and regulates the temperature of living spaces in two-pipe and four-pipe air conditioning systems. It consists of a **control unit** (PCH-RF-T12V) for wall mounting, which enables temperature, mode and fan settings via an LCD display, and an **actuator unit** (PCH-RF-R) for DIN rail mounting, which executes commands via a wireless RF connection. The connection between the control unit and actuator requires only 2 wires for power, or none if a separate 12 V DC supply is available at the control unit, while commands are transmitted via a secure and reliable wireless LoRa connection at 868 MHz.

2 wires
or 0 with 12V DC supply

LoRa
Robust RF connection

ModBus
Full system control

77
Hidden parameters

2/4-pipe
Valve, heating and cooling

DIMENSIONS

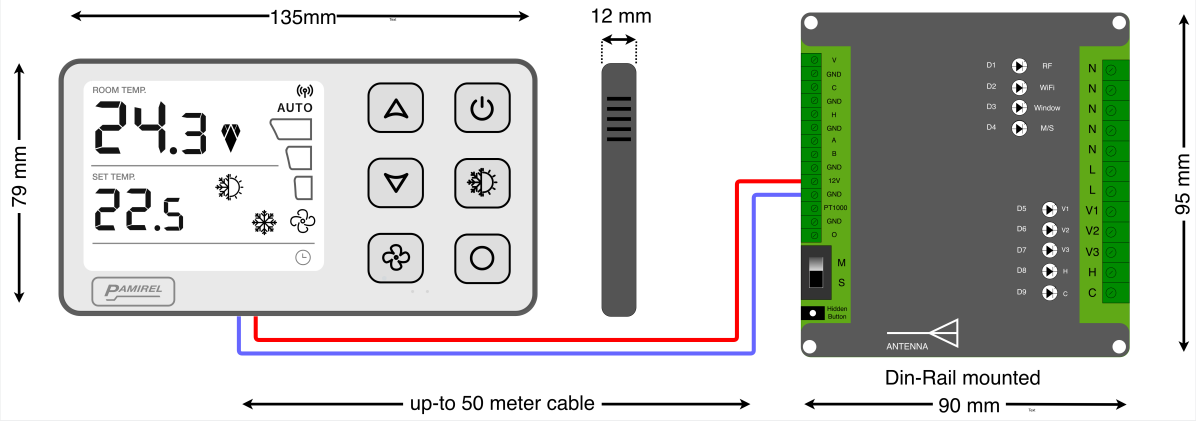

Control unit 135 × 79 × 12 mm ▪ Actuator unit 90 × 95 mm, DIN rail mounting

KEY FEATURES

Control unit

- LCD display: temperature, mode, fan speed, output status.
- 6 keys for easy operation.
- Heating, cooling, automatic mode or fan-only operation.
- 3 fixed speeds or continuous automatic fan control.
- Power supply 12 V DC / 100 mA from the actuator unit.

Actuator unit

- DIN rail mounting, 230 V AC supply voltage.
- Wireless connection to the control unit, 868 MHz LoRa, range up to 50 m.
- Input for window switch and external PT1000 thermistor.
- ModBus RTU (terminals A, B) for central control system.
- Multiple actuator units with one control unit (Master / Slave).

TECHNICAL DATA

PARAMETER	VALUE
Actuator unit power supply	230 V AC
Control unit power supply	12 V DC, 200 mA
RF connection frequency	868 MHz (LoRa)
RF connection range	up to 50 m
Operating temperature range	0–50°C
Control unit dimensions	135×79×12 mm
Actuator unit dimensions	90×95 mm
Air conditioning system	2-pipe / 4-pipe

INPUT/OUTPUT	PURPOSE
3 × 230V / 2A	Fan speeds V1, V2, V3
2 × 230V / 0.5A	Heating/cooling valves (H, C)
1 × 0–10V DC	Continuous fan speed control
2 × 0–10V DC	Heating/cooling valves (H, C)
Window switch	Open window detection
Room occupancy	Hotel occupancy switch
PT1000	for 2-pipe systems, water
ModBus RTU	Terminals A, B

ACTUATOR UNIT WIRING DIAGRAM

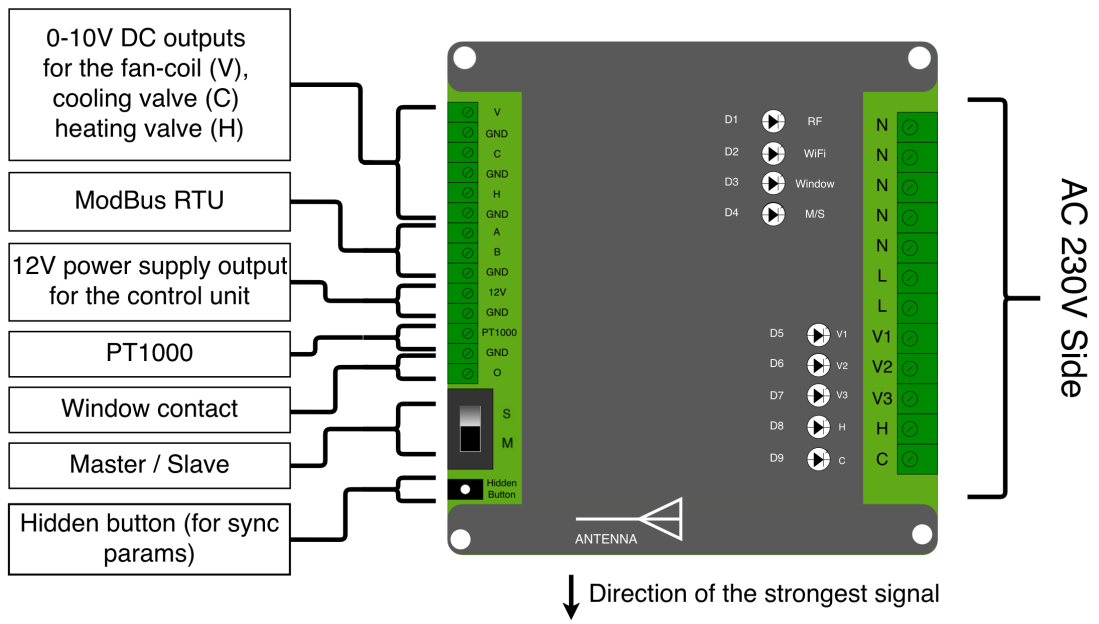

DOCUMENTATION AND FIRST STEPS

Installation and RF connection
Installation of both thermostat units and establishment of the wireless connection.

Installation_manual_PCH-RF-12V.pdf

Multiple actuator units, one control unit
Configuration of Master / Slave mode.

Installation_manual_PCH-RF-12V.pdf

Parameter settings
List of parameters (P0–P45, D0–D17, T1–T26).

Installation_manual_PCH-RF-12V.pdf

Daily operation
Setting the temperature, operating mode and fan speed.

User_manual_PCH-RF-12V.pdf