FROST PROTECTION THERMOSTAT

# FPT–01

For heating cable systems with an external NTC sensor, setting range −5 to +15 °C

The **FPT-01** is a simple electronic thermostat for frost protection with heating cables – on pipes, gutters, ramps and in other outdoor or unheated areas. The desired temperature is set with a single knob between −5 and +15 °C and measured with the included external NTC sensor. When the measured temperature drops below the set value, the built-in 16 A relay switches the supply through to the heating cable. Three LEDs indicate heating operation as well as sensor and overheating faults. The electronics are housed in an IP65 ABS enclosure with a transparent lid, so the setting and the LEDs stay visible with the lid closed.

**−5–15°C**
Setting range

**16 A**
Relay output, 230 V AC

**IP65**
ABS housing with transparent lid

**NTC**
External 10 kΩ sensor, included

**3 LEDs**
Heating and fault indication

## DEVICE OVERVIEW



Figure 1: FPT-01: NTC sensor cable (top), supply cable (bottom right), heating cable gland (bottom left).




Figure 2: Setting knob and LED indicators.

## KEY FEATURES

### Operation

- Single knob for setting the temperature from −5 to +15 °C.
- Switching hysteresis of approx. 1 K.
- Green LED: heating active (relay on).
- Two red LEDs for sensor faults and device overheating.
- Relay switches off automatically in every fault state.
- ON/OFF switch on the circuit board.

### Connections

- Power supply 230 V AC / 50 Hz (L, N).
- Switched output L′ / N for heating cables up to 16 A.
- External NTC 10 kΩ sensor, included.
- Three IP65 cable glands: M20, M25 and M16.
- Terminals for wires up to 2.5 $mm^2$.

## TECHNICAL DATA

| ELECTRICAL | VALUE |
|---|---|
| Supply voltage | 230 V AC, 50/60 Hz |
| Power consumption | approx. 1 VA |
| Switching output | 16 A / 250 V AC |
| Max. heating load | approx. 3.6 kW |
| Setting range | −5 to +15 °C |
| Hysteresis | approx. 1 K |
| Switching accuracy | ±2 K |
| Sensor | NTC 10 kΩ, included |

| HOUSING | VALUE |
|---|---|
| Material | ABS, transparent lid |
| Protection class | IP65 |
| Dimensions | 100×100×70 mm |
| Cable glands | M20, M25, M16 |
| Wire cross-section | max. 2.5 $mm^2$ |
| Ambient temperature | −20 to +50 °C |
| Weight | approx. 400 g |

## DIMENSIONS

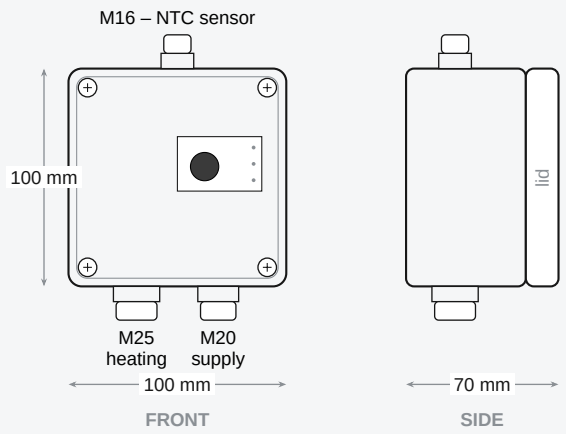


Figure 3: Housing dimensions and positions of the cable glands.

## WARNINGS

- Installation and connection must be carried out by a qualified electrician in accordance with local regulations.
- Disconnect the power supply before opening the housing. The ON/OFF switch does not disconnect the terminals from the mains.
- Protect the heating circuit with a suitable circuit breaker (max. 16 A) and a residual current device (30 mA), as required by the heating cable manufacturer.
- Loads above 16 A must not be connected directly; switch them via an external contactor.

FPT–01

# Installation instructions

**WARNING**

**Disconnect the power supply before installing or opening the thermostat!**

## WIRING

The supply cable is led in through the right gland on the lower side (M20) and connected to terminals **L** and **N**. The heating cable is led in through the left gland on the lower side (M25) and connected to terminals **L′** and **N**; the two N terminals are connected internally. The NTC sensor cable is led in through the gland on the upper side (M16) and connected to the two **NTC** terminals – the polarity of the sensor does not matter. When the relay is active, terminal L′ carries the supply voltage, so the heating cable is powered between L′ and N.

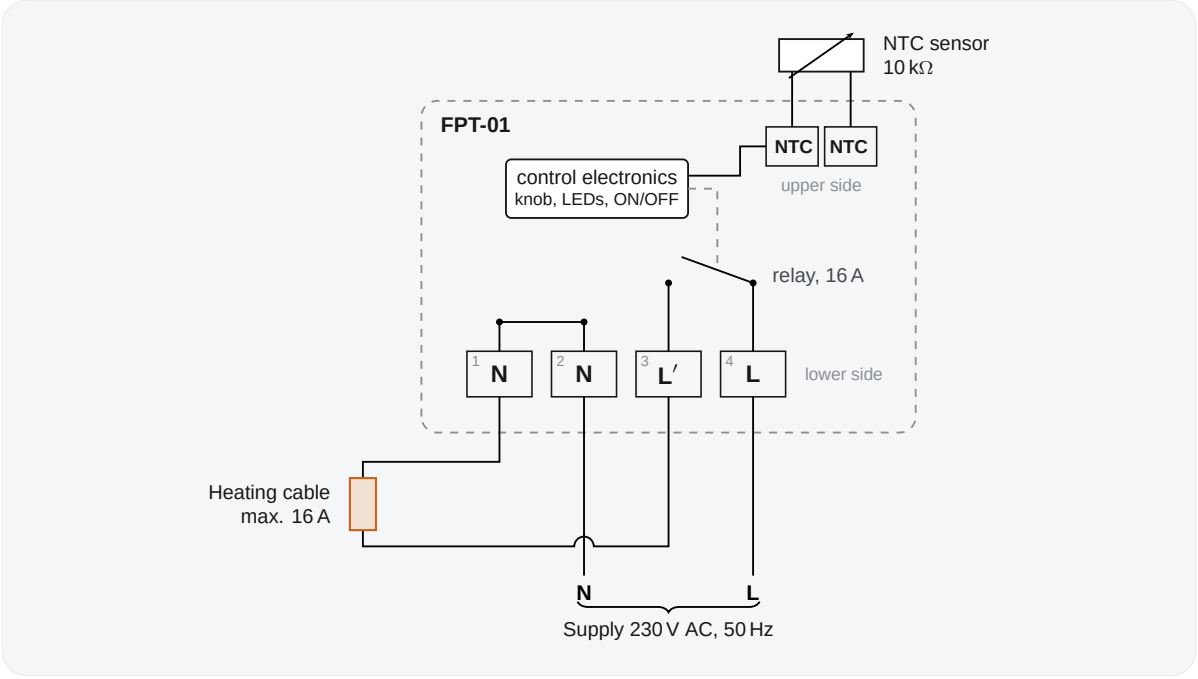


Figure 4: Wiring diagram of the FPT-01.

| TERMINAL | SIDE | FUNCTION |
|---|---|---|
| 1 – N | lower | Neutral – heating cable |
| 2 – N | lower | Neutral – supply |
| 3 – L′ | lower | Switched output to the heating cable, max. 16 A |
| 4 – L | lower | Live – supply 230 V AC |
| NTC, NTC | upper | External NTC 10 kΩ sensor (no polarity) |

### INSTALLATION STEPS

1. Loosen the 4 lid screws and remove the transparent lid.
2. Lead the cables through the glands, connect them as shown in Figure 4 and tighten the glands so that they seal tightly around the cables.
3. Set the desired temperature with the knob and set the ON/OFF switch to ON.
4. Put the lid back on and tighten the 4 lid screws evenly, so that the housing stays sealed (IP65).

### A) USE AS A PIPE THERMOSTAT

1. Check the voltage and rated power of the heating circuit (max. 16 A).
2. Fix the sensor to the pipe with aluminium tape so that it is in close contact with the pipe. Keep a distance of at least 1 m from valves and from the end of the pipe, and place the sensor offset by 90–120° from the heating cable.
3. Complete the wiring as shown in Figure 4.
4. Put the system into operation only after the pipe, sensor and heating cable have been fully insulated.

### B) USE AS AN AMBIENT THERMOSTAT

1. Check the voltage and rated power of the heating circuit (max. 16 A).
2. Place the sensor in the air, at a location that experiences the lowest temperatures in the area to be protected. **Outdoors:** protect the sensor from direct sunlight and wind. **Indoors:** do not install the sensor under thermal insulation.
3. Complete the wiring as shown in Figure 4.

FPT–01

# Operating instructions

### SETTING THE TEMPERATURE

The desired temperature is set with the knob between −5 and +15 °C (Figure 2). The scale is marked in 5 °C steps; intermediate values can be set between the marks. The setting and the LEDs can be read through the transparent lid; to change the setting, the lid must be opened. For frost protection of pipes, a setting of approx. +3 to +5 °C is usually sufficient.

### FUNCTION

When the temperature measured by the sensor drops below the set temperature, the relay switches on and the heating cable is supplied – the green **ACTIVE** LED lights up. When the temperature rises above the set temperature by the hysteresis (approx. 1 K), the relay switches off and the LED goes out. If a sensor fault or device overheating is detected, the relay switches off regardless of the temperature and the corresponding red LED lights up.

## LED INDICATORS

| LED | COLOUR | MEANING | RELAY |
|---|---|---|---|
| **ACTIVE** | green | Heating on – the temperature is below the set value | on |
| **ERROR 1** | red | NTC sensor not connected or sensor cable broken | off |
| **ERROR 2** | red | NTC sensor short-circuited or device overheating | off |

## ON/OFF SWITCH

The ON/OFF switch on the left side of the circuit board switches the thermostat off: in the **OFF** position the relay and the LEDs are inactive and the heating cable is not supplied. The terminals remain connected to the mains – always disconnect the power supply before working inside the housing.

## TROUBLESHOOTING

- **ERROR 1 lights up:** check that the sensor is connected to the NTC terminals and that the sensor cable is not broken or damaged.
- **ERROR 2 lights up:** check the sensor cable for a short circuit (e.g. damaged insulation or crushed cable). If the sensor is in order, the device is overheating – check the installation location and the load on the relay output.
- **The heating does not switch on although the temperature is below the set value and no LED lights up:** check the power supply, the position of the ON/OFF switch and the knob setting.

**Pamirel d.o.o.**
Zlatoličje 61A
2205 Starše
Slovenia